1804-24-20-FG

Steel, SAE J514 37° Flare Code 62 Flange 90° Forged Elbow, 1-1/2" Male JIC x 1-1/4" Split Flange Head

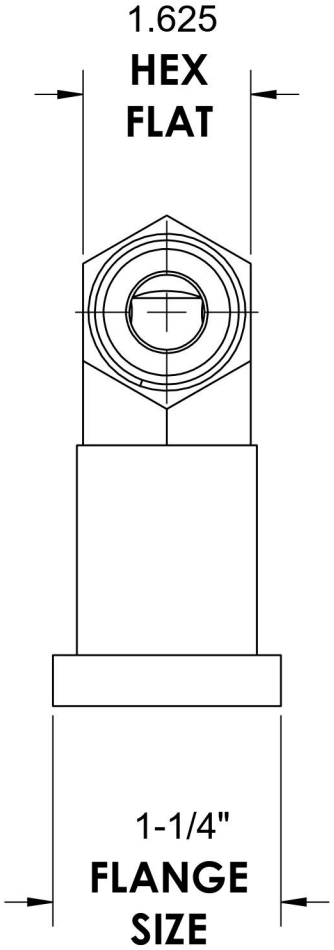

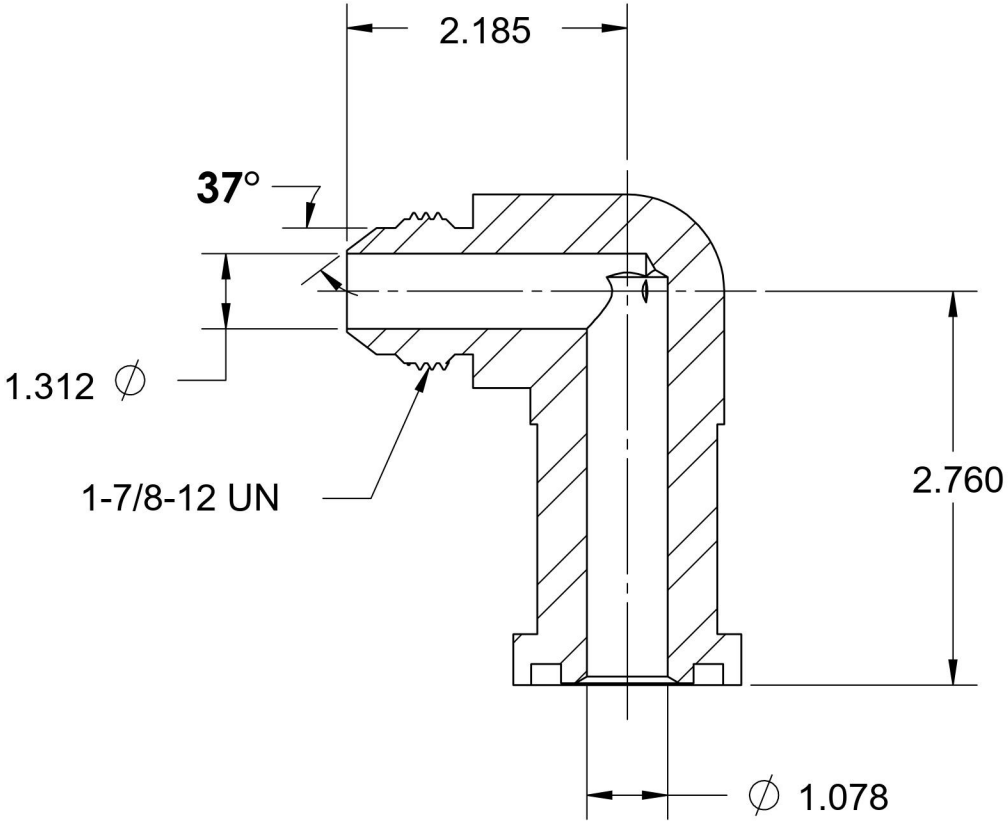

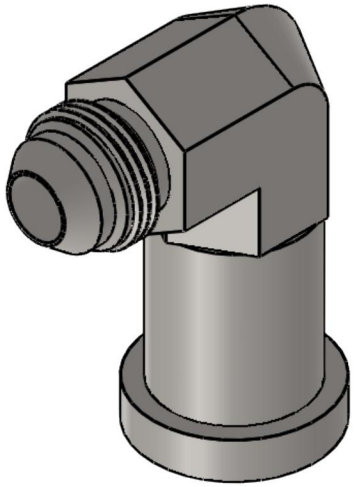

BRENNAN

6701 Cochran Road
Solon, Ohio 44139
Phone: (440) 248-1880
Toll Free: 1-888-331-1523

Temperature Rating	Material	Industry Standards	Series
-65°F to 500°F	C1045 Steel	SAE J518 Code 62, SAE J514	1804-FG
Pressure Rating	**Finish**		**Series Description**
3000psi	Trivalent Zinc		SAE J514 37° Flare Code 62 Flange 90° Forged Elbow